DIN rail mounting

BKN type

CE 6000 3

Technical data

Certificate

BKN 2P

Standard		Confirming to IEC 60898	
Approval		CCC, SABS, SEMKO CB, CE	
Protection		Against overload and short circuit	
Rated current		1, 2, 3, 4, 6, 10, 13, 16, 20, 25, 32, 40, 50, 63A	
Rated voltage		1pole 230/400VAC 50/60Hz	
		2, 3, 4pole 400VAC 50/60Hz	
Breaking capacity		6kA	
Characteristic		B, C, D curve	
Number of poles		1P, 1P+N, 2P, 3P, 3P+N and 4P	
Type of trip		Thermal-magnetic release	
Type of terminal		Lug type	
Terminal capacity		Cables up to 25mm^2	
Installation		Mounting on 35mm DIN rail	
Width		17.8mm per pole	
Electrical endurance			
	In	1 ... 32A	40 ... 63A
	Endurance	4000 operations	4000 operations
	Max. frequency (Cycles/hour)	240	120

Optional accessories ... Auxiliary switch, AX

Composition	Consists of 1 changeover contact	
Rating	AC circuit 6A at 240VAC 3A at 415VAC	DC circuit 2A at 48VDC 1A at 125VDC
Type of terminal	Lug type	
Terminal capacity	Cables up to 2.5mm^2	
Width	9mm	

Optional accessories ... Auxiliary switch, AL

Composition	Consists of 1 changeover contact	
Rating	AC circuit 6A at 230VAC 3A at 415VAC	DC circuit 2A at 48VDC 1A at 125VDC
Type of terminal	Lug type	
Terminal capacity	Cables up to 2.5mm^2	
Width	9mm	

Attach to the left side of BKN. Possible to attach only one AX or AL.

Optional accessories ... Shunt trip device, SHT

Rated voltage (Ue)	AC 24V, AC110-415V
Operate voltage range	70-100% Ue
Width	18mm

Optional accessories ... Over/Under voltage trip device, OVT/UVT

Rated Voltage (Ue)	AC 230V
Over-voltage tripping range	280V ±5%
Under-voltage tripping range	170V ±5%
Width	18mm

Attach to the right side of BKN. Possible to attach only one SHUNT or UVT/OVT.
SHT or UVT accessory are not tripped when zero voltage.

Characteristics curves & temperature compensation

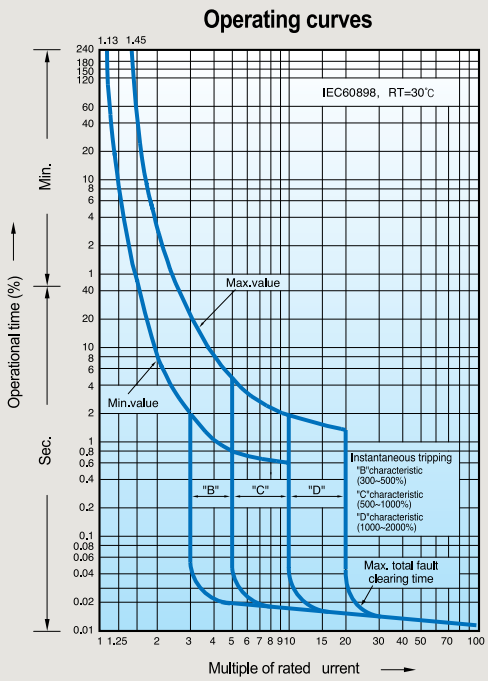

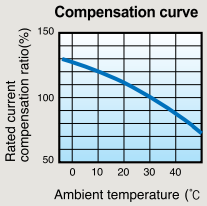

(Temperature compensation table)(IEC60 898-1)

In(A)	20℃	25℃	30℃	35℃	40℃	45℃	50℃	55℃	60℃
1	1.05	1.02	1.0	0.98	0.95	0.93	0.9	0.88	0.85
2	2.08	2.04	2.0	1.96	1.92	1.88	1.84	1.8	1.74
3	3.18	3.09	3.0	2.91	2.82	2.7	2.61	2.49	2.37
4	4.24	4.12	4.0	3.88	3.76	3.64	3.52	3.36	3.24
6	6.24	6.12	6.0	5.88	5.76	5.64	5.52	5.4	5.3
10	10.6	10.3	10.0	9.7	9.3	9.0	8.6	8.2	7.8
16	16.8	16.5	16.0	15.5	15.2	14.7	14.2	13.8	13.3
20	21.0	20.6	20.0	19.4	19.0	18.4	17.8	17.4	16.8
25	26.2	25.7	25.0	24.2	23.7	23.0	22.2	21.5	20.7
32	33.5	32.9	32.0	31.4	30.4	29.8	28.4	28.2	27.5
40	42.0	41.2	40.0	38.8	38.0	36.8	35.6	34.4	33.2
50	52.5	51.5	50.0	48.5	47.4	45.5	44.0	42.5	40.5
63	66.2	64.9	63.0	61.0	58.0	56.7	54.2	51.7	49.2

I1: 113% In, I2: 145% In according to IEC60 898-1

Overall dimensions

BKN

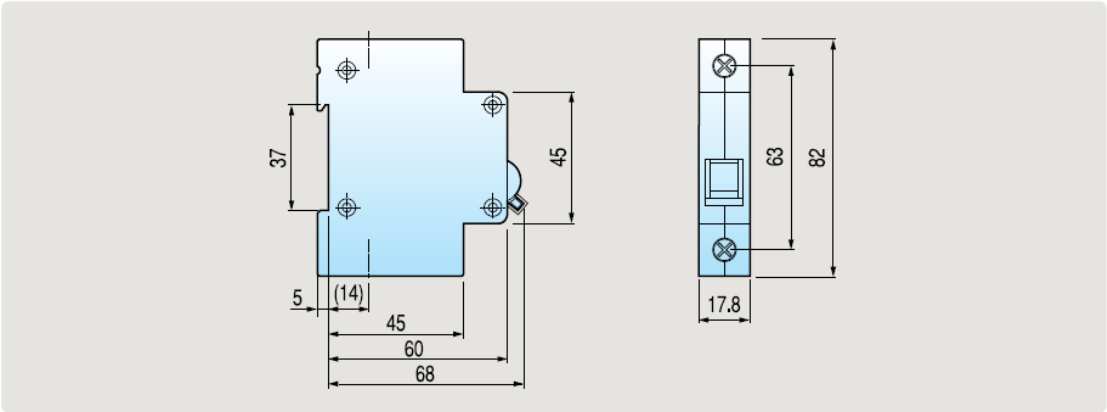

Overall dimensions

SHT
UVT/OVT

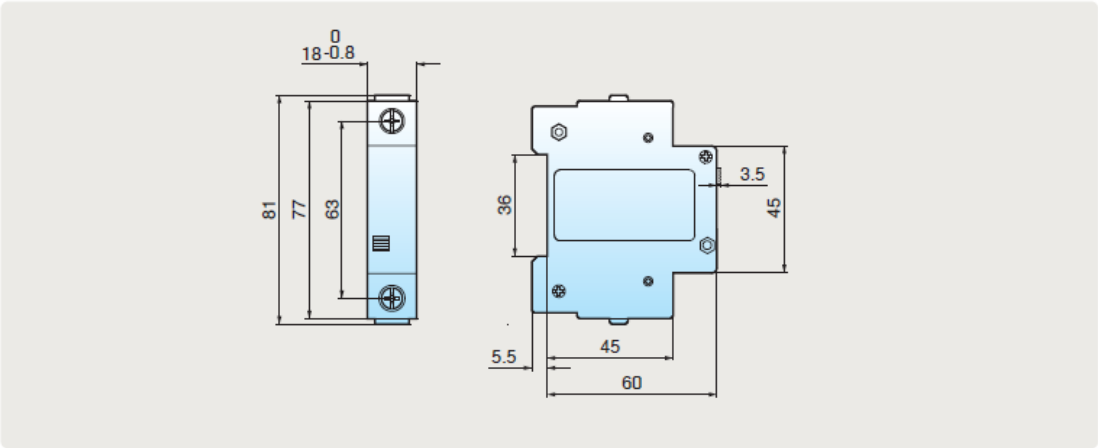
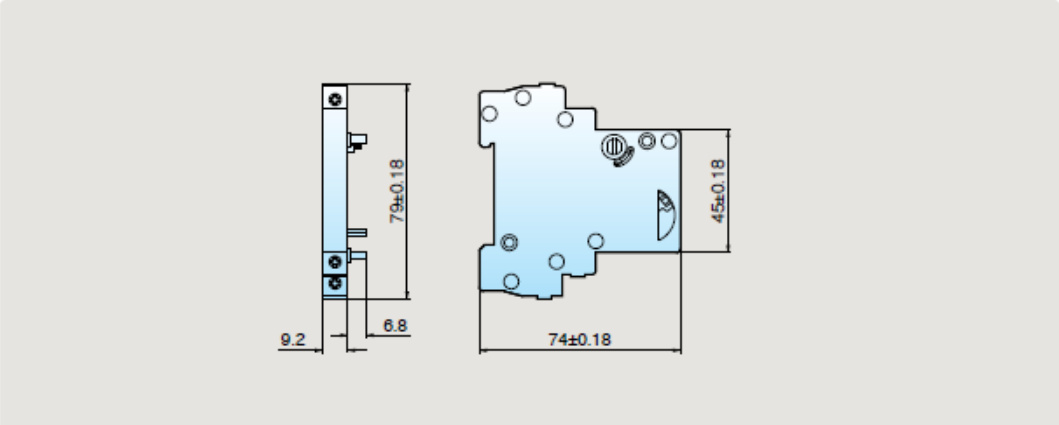
AX/AL